Approved For Release 2003/08/28 : CIA-RDP80-00810A001900450002-0

CENTRAL INTELLIGENCE AGENCY

INFORMATION REPORT

This Document contains information affecting the National Defense of the United States, within the meaning of Title 18, Sections 793 and 794, of the U.S. Code, as amended. Its transmission or revelation of its contents to or receipt by an unauthorized person is prohibited by law. The reproduction of this form is prohibited.

SECRET

25X1 [ ]

COUNTRY	USSR (Leningrad Oblast)	REPORT NO.	[ ] 25X1A
SUBJECT	Development of the Wasserfall Computer System at NII 49, Leningrad	DATE DISTR.	4 September 1953
	25X1A	NO. OF PAGES	33
DATE OF INFO.	[ ]	REQUIREMENT NO.	[ ] 25X1A
PLACE ACQUIRED	[ ]	REFERENCES	[ ]

THE SOURCE EVALUATIONS IN THIS REPORT ARE DEFINITIVE.
THE APPRAISAL OF CONTENT IS TENTATIVE.
(FOR KEY SEE REVERSE)

25X1

[ ]

General

1. The most important contribution of the Germans at NII 49 was the further development of the Wasserfall computer system. However, there were other projects
25X1X that were carried out. [ ]

25X1X [ ]

2. [ ] NII 49 continued the development of the Wasserfall computer system which had been started at Gema, Berlin. At Gema, [ ] reassembled a
25X1X Wasserfall computer system in mock-up form. The majority of the components
of the system were available to us at the time. The Soviets had instructed
25X1 the group at Gema to rebuild the entire computer system. It appears that the Soviets were under the impression at the time that the German development program was further advanced than it actually was. After the German progress had been made clear, the Soviets instructed the group to complete the development into a finished prototype. The key Soviets with whom the Gema Germans dealt with were:

SECRET 25X1

STATE	#x	ARMY	#x	NAVY	#x	AIR Ev	#x	FBI		AEC		OSI Ev	x	ATIC Ev	x

[ ]

(Note: Washington Distribution Indicated By "X"; Field Distribution By "#".)

439

Approved For Release 2003/08/28 : CIA-RDP80-00810A001900450002-0

Approved For Release 2003/08/28 : CIA-RDP80-00810A001900450002-0

25X1A

Colonel (Army) BARNIM, Director of Gema
Colonel (Army) SINELSHCHIKOV, Chief of Antiaircraft Missiles (under BARNIM)

25X1X 3. [redacted]

4. In general, the Germans had most of the necessary equipment, but our work progressed slowly because we depended on the productivity of the Soviet workshops (machine shops, electrical shops, etc.). There was always difficulty with the vacuum tube supply. They had no spare German tubes and consequently used them very carefully. The work on the redesign and improvement lasted until September 1951. The first computer, however, was delivered to the Soviets in July 1949, when it was apparently taken to a firing range. This firing range, according to hearsay, was about 500 miles southeast of Moscow. The computer delivered to the Soviets was in a mock-up form. (See Diagram 6, page 14.)

Modification of the Computer System for Soviet Components

5. The biggest problem in modification to accommodate Soviet components lay in the change from 500 cycle components to 50 cycle components. This change-over was made because there were no 500 cycle components available. The 50 cycle components were larger and not as accurate as the German 500 cycle equipment. For example, the German coordinate resolvers were supposed to be accurate down to one mil. The Soviet resolvers were accurate to five mils. The German potentiometers used in the Wasserfall computers were accurate to about two mils, whereas the Soviet potentiometers were accurate only to 10 mils. The accuracy of the Soviet components drove our group to compensating methods, and we hoped that the errors would cancel out.

Soviet Resistors

25X1 6. [redacted] Soviet resistors were very poor. They needed resistors accurate within 1.0 per cent, but could only get five per cent resistors. We had to sort through hundreds of resistors in order to get the ones we needed. The temperature characteristics were also bad. It was necessary to readjust the computers as the resistors warmed up. It was considered standard procedure at NII 49 to allow a one hour warm-up period for computer equipment. It was later planned to provide some temperature control equipment in the computers in order to meet the Soviet specification of minus 70 degrees to plus 50 degrees centigrade.

Soviet Condensers

7. The accuracy of the condensers were equally as bad as the Soviet resistors. Production precision condensers were accurate only to five per cent. The temperature characteristics were also unsatisfactory.

Soviet Vacuum Tubes

8. Soviet vacuum tubes were generally reliable. The tube characteristics were roughly comparable to those available to the Germans during the war. However, tubes with glass envelopes tended to become gassy in a relatively short time. The supply was evidently adequate, although it took months to deliver on requests. The standard answer to queries on supplies was "Later". After a short while, we recognized the inevitability of long delays in the tube supplies, and laid in an adequate supply which we kept up to a certain level at all times.

Approved For Release 2003/08/28 : CIA-RDP80-00810A001900450002-0

Approved For Release 2003/08/28 : CIA-RDP80-00810A001900450002-0

25X1A

Laboratory Test Equipment

9. The lack of test equipment was the largest problem that the Germans had in the USSR. It was difficult to obtain an adequate supply of ammeters, milliammeters, frequency meters, voltmeters, wattmeters. Germans
25X1 were forced to construct our own stroboscope, two-beam oscilloscope, and vacuum-tube-voltmeter. The test equipment that we did have was largely German, Austrian, and English. The Germans were forced to improvise a great deal in providing test equipment. The Soviet engineers were quite used to this situation, and were very good at improvising whenever they were faced with lack of equipment. The Soviets were evidently surprised at seeing test jacks built into computer equipment. They were in the habit of "lashing up" equipment in a very crude form.

Improvement to the Initial Trajectory Computer (Einlenkrechner)

10. The first Wasserfall computer system was delivered to the Soviets in 1948. This represented the completion of the original design started in Germany during the war. Even before the firing tests in the summer of 1949, the Soviets demanded more accuracy in the computer whose inaccuracies were as great as 10 degrees. The improvements included:

a. Stabilized voltage source for the servo amplifier.

b. Phase corrector for input of Gamma double dot to amplifier.

c. Electrical derivation of Gamma double dot versus tachometric derivation in the original.

d. A limiter was included in the computer to prevent the missile from closing more rapidly than for a target moving at four degrees a second (from the control point). This was done in order to prevent the necessity for high accelerations in control of the missile during its initial trajectory.

e. A "chopper" in the design as an improved method of producing an alternating current carrier.

11. This computer was tested by applying an arbitrary input, and measuring the difference between the output and the theoretical output. The accuracy of the computer was below one degree, or better. During the period that work was being done on the improvement to the computer, the Soviets displayed no apparent interest. However, in the mornings when the Germans came to work, it was obvious that someone had been tinkering with the equipment. This to me reflected covert Soviet interest in the Wasserfall computer. The computer was tested and turned over the the Soviets in September 1951. /See pages 9-16./

Design to Eliminate the Parallax Computer

12. The parallax computer introduces errors into the calculation of the flight trajectory and during the control that follows. The German group redesigned the initial trajectory computer so that the parallax distance setting in the computer was gradually reduced to zero over a period of 12 seconds, starting approximately eight seconds after firing of the Wasserfall missile. This, of course, introduces a parallax error. This error, however, is a diminishing error, and rapidly reduces to a second order term in the flight computation. This gives an overall improvement since the entire parallax computer is gradually cut completely out of

Approved For Release 2003/08/28 : CIA-RDP80-00810A001900450002-0

Approved For Release 2003/08/28 : CIA-RDP80-00810A001900450002-0

25X1A

the computation. [See pages 9-16.] The parallax computer contributed errors of plus or minus two meters for the base line distance u, and 3/4 degree in vertical angle measurement. Elimination of the parallax computer not only reduced error in measurement, but increased the smoothness of operation of the sight through which the joystick operator looked.

Redesign of Servo Systems to Eliminate Tachometers

13. One advantage accrued from the changeover to 50 cycle components in the servo system design. At this frequency, it is practical to use alternating current "notch" filters, [redacted] This is true
25X1 because the modulation frequency band during control is large compared to the carrier frequency stability error. At 500 cycles, the modulation band is relatively smaller and comparable to the errors obtained in even a fairly well frequency-stabilized source. Consequently, the Germans designed and built these notch filters to give phase advance to the input signals.

14. [redacted]
25X1X

25X1

15. This redesign took place from late 1949 to late 1951. [redacted] the results of this redesign were successful. Since very little test equipment was available to confirm the exact performance characteristics of the redesigned servo systems, it must be considered that the requirements were not too stringent.

Redesign of the Cartesian Coordinate Parallax Computer Amplifier

16. As a result of the success in designing phase advance networks at 50 cycles, new amplifiers were designed using "notch" filters for use in
25X1 the Cartesian coordinate parallax computer. [redacted]
25X1 [redacted] The design was actually carried out by Ing. BIELECKE.

Stable Voltage Source

17. During the design and experimentation carried out on the Wasserfall com-
25X1 puter, [redacted] decided that it was necessary to have a very stable
25X1 voltage supply at 500 cycles to bench-test the breadboard computers. It was necessary that the voltage stability be within 10 per cent, and the frequency within five per cent. A request was made of the Soviets to procure such a power supply, but they were unable to fulfill the request. Consequently, the Germans used an old BOAS Company converter that had been brought with them from Germany.

Tau Angle Computer

18. During the development of the Wasserfall computer, the Soviets made a suggestion regarding the design of the Tau-angle computer. The German design of the Tau-angle computer involved the calculation of Tau by picking off the appropriate angle (sigma dot) and multiplying it by the sine of the vertical angle through the use of a sine resolver. The

Approved For Release 2003/08/28 : CIA-RDP80-00810A001900450002-0

Approved For Release 2003/08/28 : CIA-RDP80-00810A001900450002-0
25X1A

Soviets suggested a method whereby the Tau calculation could be accomplished by precession of a gyroscope. [A technical discussion of the two methods of Tau-angle determination is found on pages 24 and 25.] The Wasserfall missile was stabilized in the roll axis. It can be seen that after the vertical firing, if the missile is required, for example, to turn to the west, a turn control to the missile will result in the missile, in effect, being on its side. If further turn control signals are applied to the turn control axis of the missile, the missile will not turn, but go either up or down. To prevent this, the Tau-angle computer resolves the change in axis that results from the missile being stabilized in roll and the optical missile control sight turning on the ground according to the following equation:

$$\dot{T} = \dot{\sigma} \sin \gamma$$

where T is the angle of translation, σ is the angle through which the optical control sight has turned.

19. γ is the vertical angle to the missile from the control sight. Consequently the elevation and turn control signals that originate from the joystick (Knueppel) operator are resolved into sine and cosine components at the angle Tau. The sine components of the joystick signals are then sent to the missile elevation control system via the radio transmitter, and cosine components are sent to the turn control system of the missile.

Automatic Selection of Offset Parameters in the Computer

20. In order to render the Wasserfall system more effective, a design was made in 1950 of a component to provide automatic insertion of the offset parameters (sigma u and u). Thus, in the selection of a firing site by the Wasserfall commander, the appropriate offset values required in the parallax computers were inserted by a preset selector. [Technical details and diagram are found on pages 26-28.]

Height Parallax Computer

21. In the redesign of the Wasserfall computer system, provision was made for compensation for a difference in height between the control point and the firing points. When a particular firing site was selected, an appropriate initial angle was furnished to the optical sight, so that it accommodated the difference in position of the missile when fired from an elevation different from the control point. Provisions were made in the computer to handle height differences of 30 meters. [Technical details on this part of the computer can be found on pages 9-21.]

Simulator for Dynamic Testing of the Wasserfall Computer

22. In order to make dynamic tests of the computer system, test equipment was made to furnish inputs to the computer. These inputs corresponded to values of horizontal and vertical angles that are furnished normally by the target sight. In the test equipment two cams, operated by a constant speed motor, furnished these values. Two more cams computed values of the desired output of the Wasserfall computer. The output of the computer and the output of the cams providing the theoretical desired output went to differential indicating devices. These indicators then showed the error in the computer directly. To simplify the testing procedure, marks were placed on either side of zero of the indicators.

Approved For Release 2003/08/28 : CIA-RDP80-00810A001900450002-0

Approved For Release 2003/08/28 : CIA-RDP80-00810A001900450002-0

without the use of an all-weather aiming device such as a precision radar set. As described by source, there were provisions for a radar, but this radar was to be used as a searching element rather than a precision tracking element. In diagrams, pages 8-16, it can be seen that inherent in the design were connections for a radar. The firing commander, however, switches to the optical target tracking sight as soon as he decides that the target is within range of the six firing sites under his command.

25X1 [redacted] no further knowledge of the contemplated use of homing equipment in connection with the Wasserfall missile. There were apparently some plans for the use of a proximity fuse when the work was started in Gema in 1946, and prior to that during World War II. No work was done on this by the German group at NII 49. There was nothing that was said or done by the Soviets at NII 49 to indicate that there was activity along the lines of target homing or proximity fuses.

Considering the restriction of the German activity to fairly orthodox engineering refinement to the original Wasserfall control system, and the lack of evidence of all weather operation, and the lack of target seekers or proximity actuated fuses, it must be concluded that the six years of activity by the German group at NII 49 did not significantly advance the Soviet capability in ground-to-air missiles as tactical weapons. There are other by-products

25X1A which must be noted, however. Considerable experience was gained by the Soviets in the development of a prototype ground-to-air missile control

25X1 system. Additionally, as [redacted] the actual process or research and development was under close observation at all times. Many things must have been learned by the Soviets

25X1 by this observation; just on the general art of research and development, as carried out by the Germans. [redacted] there seemed to be a

25X1 great gap between theoretical analysis and the actual production of "black boxes" based on theory. [redacted]

25X1 [redacted] fairly high opinion of the quality of the theoretical capabilities of the Soviets [redacted] at NII 49. [redacted] qualified 25X1
this by saying that they were "only theoretical and not practical at all". 25X1

25X1 [redacted] opinion may have to be discounted slightly, as typical of the general opinion of many "practical" men for theoreticians.

In comparing the quality and extent of development done on Wasserfall at NII 49 with a problem of equal difficulty which might be presented to the U.S. research and development echelons, it must be stated that, even though the Germans at NII 49 worked under severe handicaps, the efficiency and initiative shown is very low. It is conceivable that a problem of this nature could be solved in a satisfactory manner, if not radically improved, in less than two years by a comparable institution in the United States. This comparison might be unfair since the German effort, plus the Soviet effort which was connected with it, did not have the benefit of the tremendous facilities available for problems of this kind. However, since these differences actually exist, they must be taken into consideration in weighing the value of the activity at NII 49. It should be stated parenthetically that it is not a question of weighing individuals, man for man, idea for idea, but of comparing the total capability which includes the available resources, the background of research and data, component quality, and even

25X1X confidence in the scientific effort.

[redacted]

Approved For Release 2003/08/28 : CIA-RDP80-00810A001900450002-0

Approved For Release 2003/08/28 : CIA-RDP80-00810A001900450002-0

During the course of the test run, the computer would be readjusted if the needle of the indicator went beyond the marks placed on the indicator. The marks were placed at points representing plus and minus 1.0 degree. [A functional diagram of this equipment is found on page 29.]

Controller Training Equipment

23. An operational trainer was designed and built by the Germans at NII 49. This was furnished to the Soviets along with instructions for the operation of the trainer and the training of future operators. [Pages 30-32 contain technical information and diagrams of the training equipment.]

Calibration of Amplifier Gains

24. A device was designed to insert inputs to the amplifiers of the Wasserfall computer. These inputs would be constantly-changing angles, and angles whose value changed as a sine function of time. The purpose of this test equipment was to permit the adjustment of the amplifiers associated with the determination of $\dot{\varepsilon}$, ε, σ_R, $\dot{\sigma}_R$, h_R, ε_{KR} and $\dot{\varepsilon}_{KR}$. [Reference is made to page 33 where a simplified schematic diagram is shown of the bench test lay-out when using the calibration equipment.]

25. A constant speed motor was used to furnish the drive for the test equipment. This motor also furnished a time base for the oscillographic recorder which could be used to measure the error voltages when the test set up was in operation. The motor was connected, either directly to a set of coarse and fine selsyns or through a mechanical sine wave generator. Connected mechanically to the motor was a tachometer which furnished a voltage proportional to the speed of the angular change of the transmitter selsyn rotors. Also connected to the motor was a potentiometer which produced a voltage proportional to the angular position of the transmitter selsyns. In this manner both mechanical angles and voltages were transmitted by the drive system for the test equipment. The various amplifiers were then connected in the circuit and the error measured by the indicator shown in the upper right hand portion of diagram [page 33], and by an oscillograph which recorded time pulses and speed of angular change. By inspection, then, the amplification and phase advance of the different amplifiers could be adjusted for optimum operation. This provided the Germans with a preliminary system for calibration of the amplifiers before inserting them into the dynamic tests of the entire computer system in operation.

25X1 [redacted]

25X1A [redacted] there seemed to be an undercurrent of interest in the Wasserfall that exceeded that for any other activity by the Germans at

25X1 NII 49. [redacted] there was an obvious attempt at dissimulation on the part of the Soviets regarding their true interests.

25X1 However, [redacted] several instances where undisguised interest was displayed in the form of questions from individuals in the parallel Soviet computer development laboratory, and by questions from visiting Soviets from Moscow, and by covert tinkering with test setups during the night when the Germans were in their billets. The fact that actual firings were made

25X1 using the first mock-up finished in 1948 tends to support the [redacted] opinion of serious Soviet interest in this missile. Regarding the capabilities of this missile as a tactical weapon, it can not be seriously considered

Approved For Release 2003/08/28 : CIA-RDP80-00810A001900450002-0

Approved For Release 2003/08/28 : CIA-RDP80-00810A001900450002-0

25X1A

SECRET

ACTIVITY CHART at N.F.I. 49

Zeitdiagramm der wichtigsten Arbeiten der Kreiselgeräte-Spezialistengruppe im NTJ 49

Project	1947	1948	1949	1950	1951	1952
System design for Rheintochter Schmetterfall Control						
Rheintochter Computer						
Schmetterling Computer						
Polar Computer (Wasserfall)						
Cartesian Computer (Wasserfall)						
Initial Trajectory Computer (Wasserfall)						
Automatic offset Parameter Selector						
Computer Test equipment						
Electrical Tau-Angle Computer						
Gyroscopic " "						
Gyro Resolver for Rheintochter Missile						
3-Axis Gyro-stabilized Platform						
Trainer for Missile Controllers						
Anti-ship Missile						
Cable signal Transmission system						
Quadradic Equation Computer						
1st & 2nd Derivative Networks for Steering Control System						

SECRET

Approved For Release 2003/08/28 : CIA-RDP80-00810A001900450002-0

Approved For Release 2003/08/28 : CIA-RDP80-00810A001900450002-0

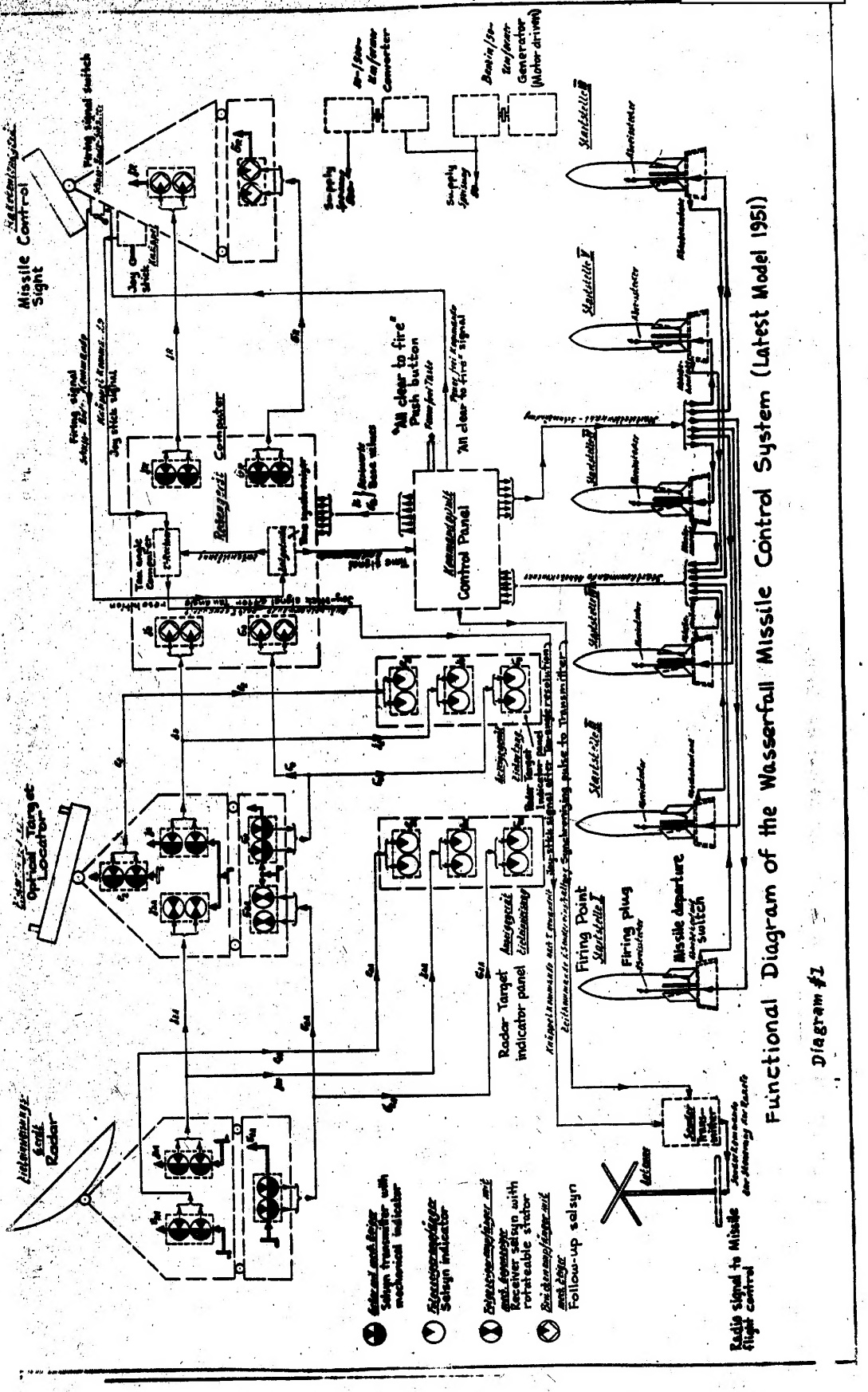

Functional Diagram of the Wasserfall Missile Control System (Latest Model 1951)

Diagram #1

Approved For Release 2003/08/28 : CIA-RDP80-00810A001900450002-0

Approved For Release 2003/08/28 : CIA-RDP80-00810A001900450002-0

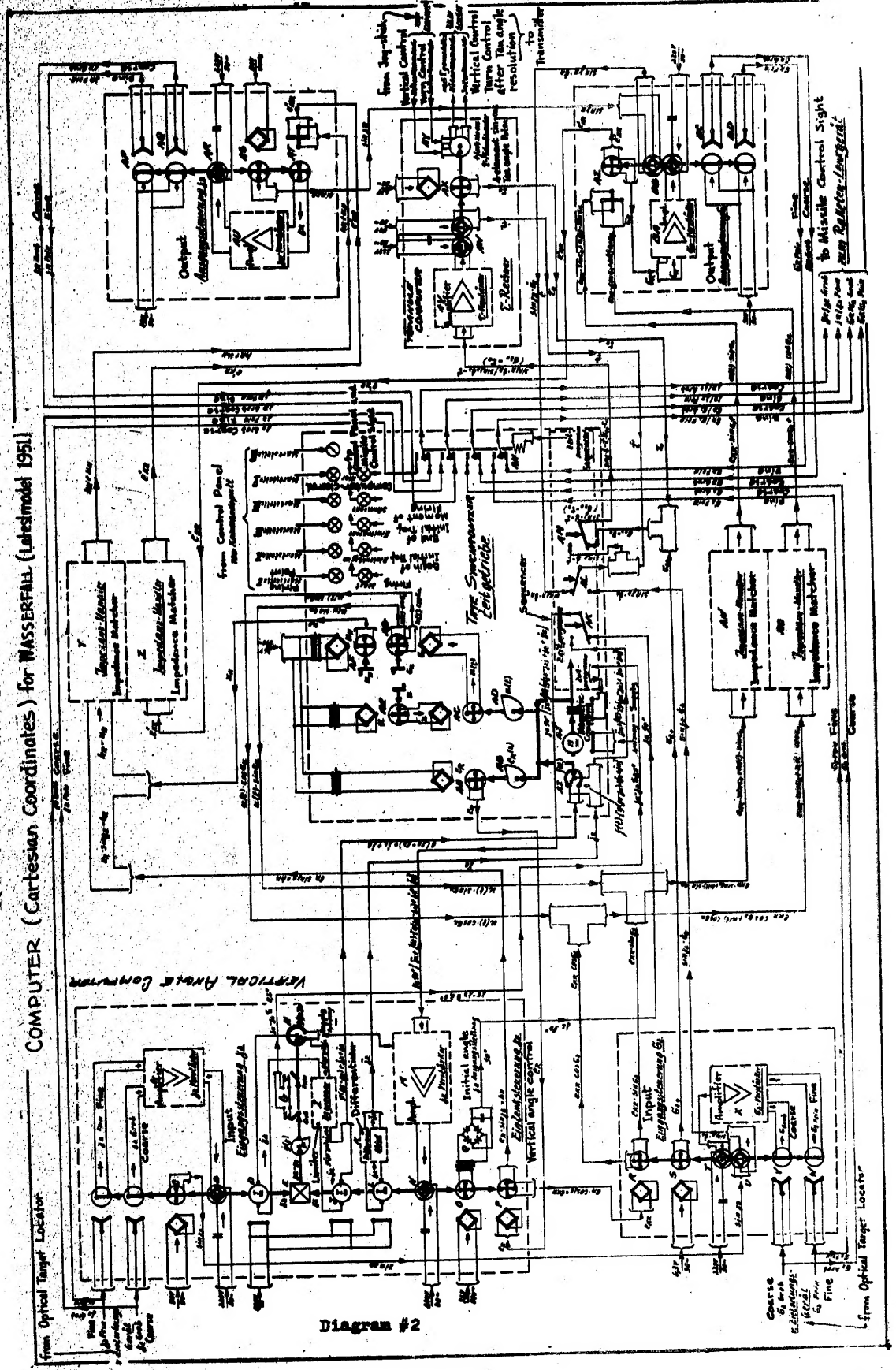

Diagram #2

Approved For Release 2003/08/28 : CIA-RDP80-00810A001900450002-0

Approved For Release 2003/08/28 : CIA-RDP80-00810A001900450002-0

25X1A

LEGEND

- α = Base Line
- α_B = Base Line Angle
- ϵ_R = Missile Slant Range
- β_R = Vertical Angle, Target
- δ_R = Horizontal Angle, Target
- β_R = Vertical Angle, Missile
- δ_R = Horizontal Angle, Missile
- ϵ'_{HR} = Horizontal component of Missile range from firing point
- ϵ'_{HR} = Horizontal component of Missile range from control point
- h_R = Height of Missile

Computer Equations:

$$h_R = \epsilon_R \cdot \sin\beta_R \quad ; \quad \epsilon_{HR} = \epsilon_R \cdot \cos\beta_R \qquad (\beta_R + f(\theta) \cdot [\beta_R(\beta_R - \beta_R) + \beta_R + \beta_R] = 0)$$

$$\epsilon'_{HR} = \sqrt{(\epsilon_{HR} \cdot \sin\delta_R + \alpha \cdot \sin\alpha)^2 + (\epsilon_{HR} \cdot \cos\delta_R + \alpha \cdot \cos\alpha)^2}$$

$$\boxed{\beta_R = \arctan \frac{h_R}{\epsilon'_{HR}}} \qquad \boxed{\delta_R = \arctan \frac{\epsilon_{HR} \cdot \sin\delta_R + \alpha \cdot \sin\alpha}{\epsilon_{HR} \cdot \cos\delta_R + \alpha \cdot \cos\alpha}}$$

GEOMETRIC DIAGRAM - CARTESIAN PARALLAX COMPUTER

Diagram #3

Approved For Release 2003/08/28 : CIA-RDP80-00810A001900450002-0

Approved For Release 2003/08/28 : CIA-RDP80-00810A001900450002-0

GEOMETRIC DIAGRAM - POLAR PARALLAX COMPUTER

Diagram #4

Approved For Release 2003/08/28 : CIA-RDP80-00810A001900450002-0

Approved For Release 2003/08/28 : CIA-RDP80-00810A001900450002-0

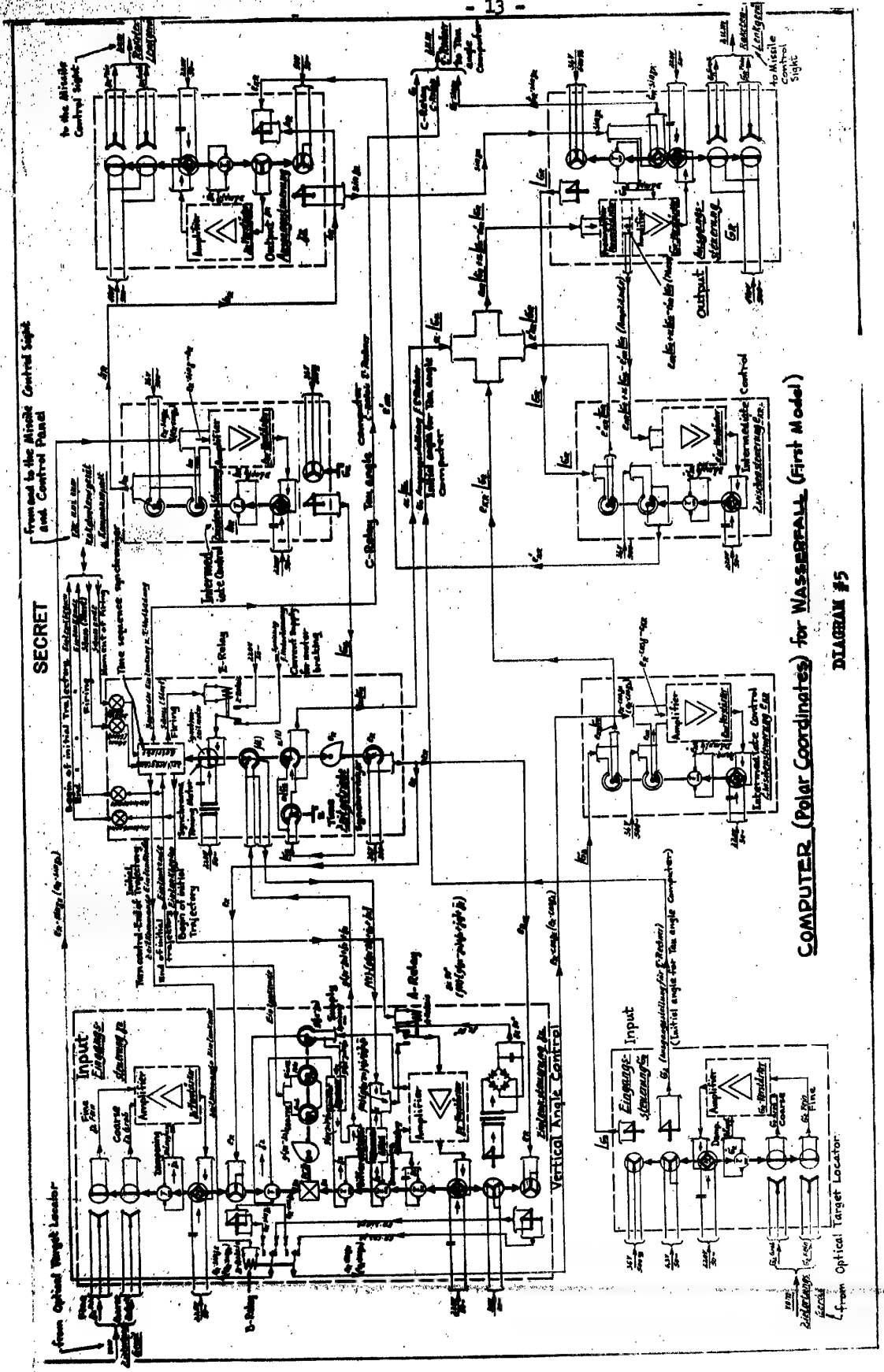

Approved For Release 2003/08/28 : CIA-RDP80-00810A001900450002-0

Approved For Release 2003/08/28 : CIA-RDP80-00810A001900450002-0

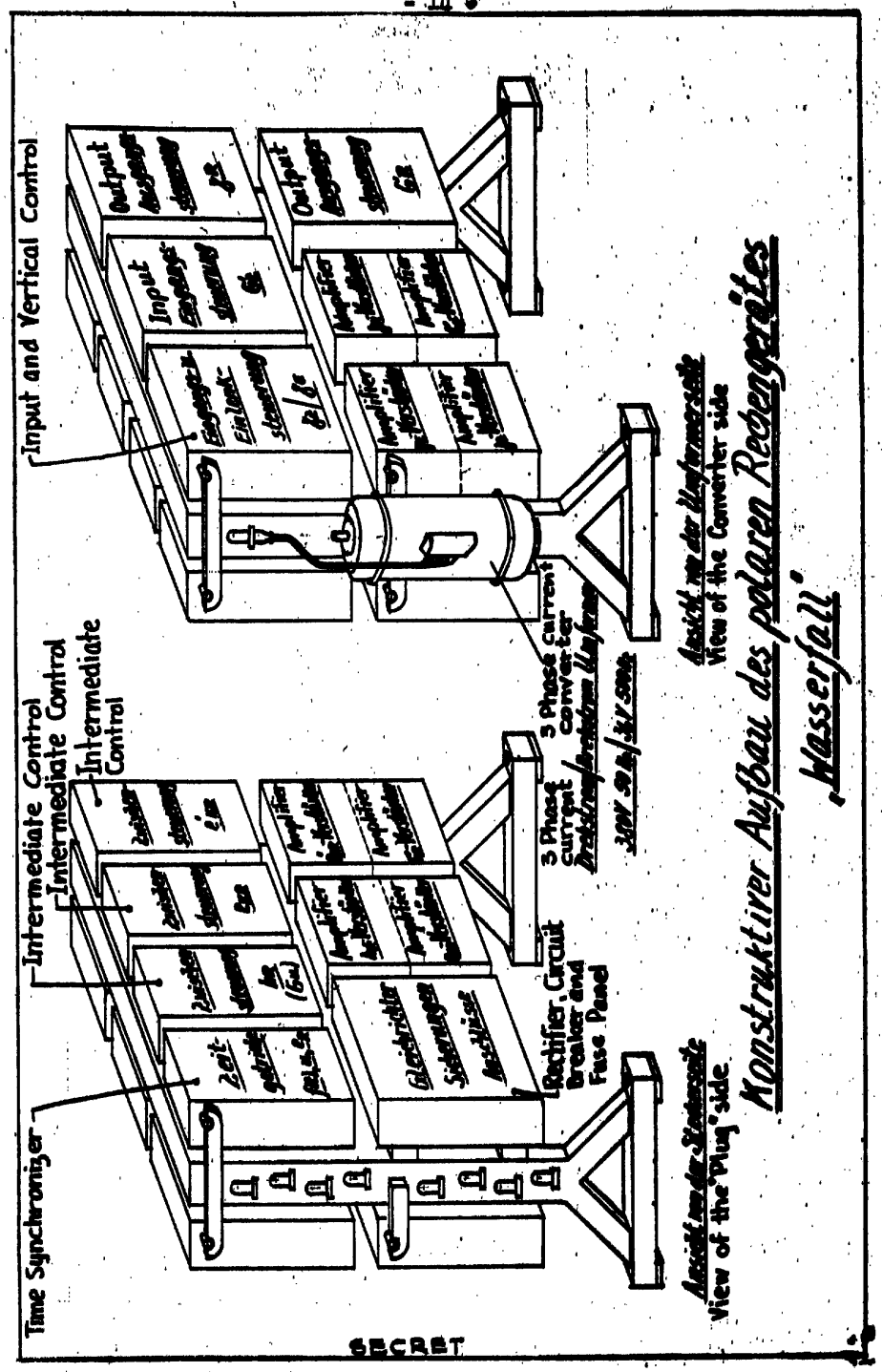

Isometric view of the
WASSERFALL POLAR COMPUTER

Diagram #6

SECRET

Approved For Release 2003/08/28 : CIA-RDP80-00810A001900450002-0

Approved For Release 2003/08/28 : CIA-RDP80-00810A001900450002-0

25X1A

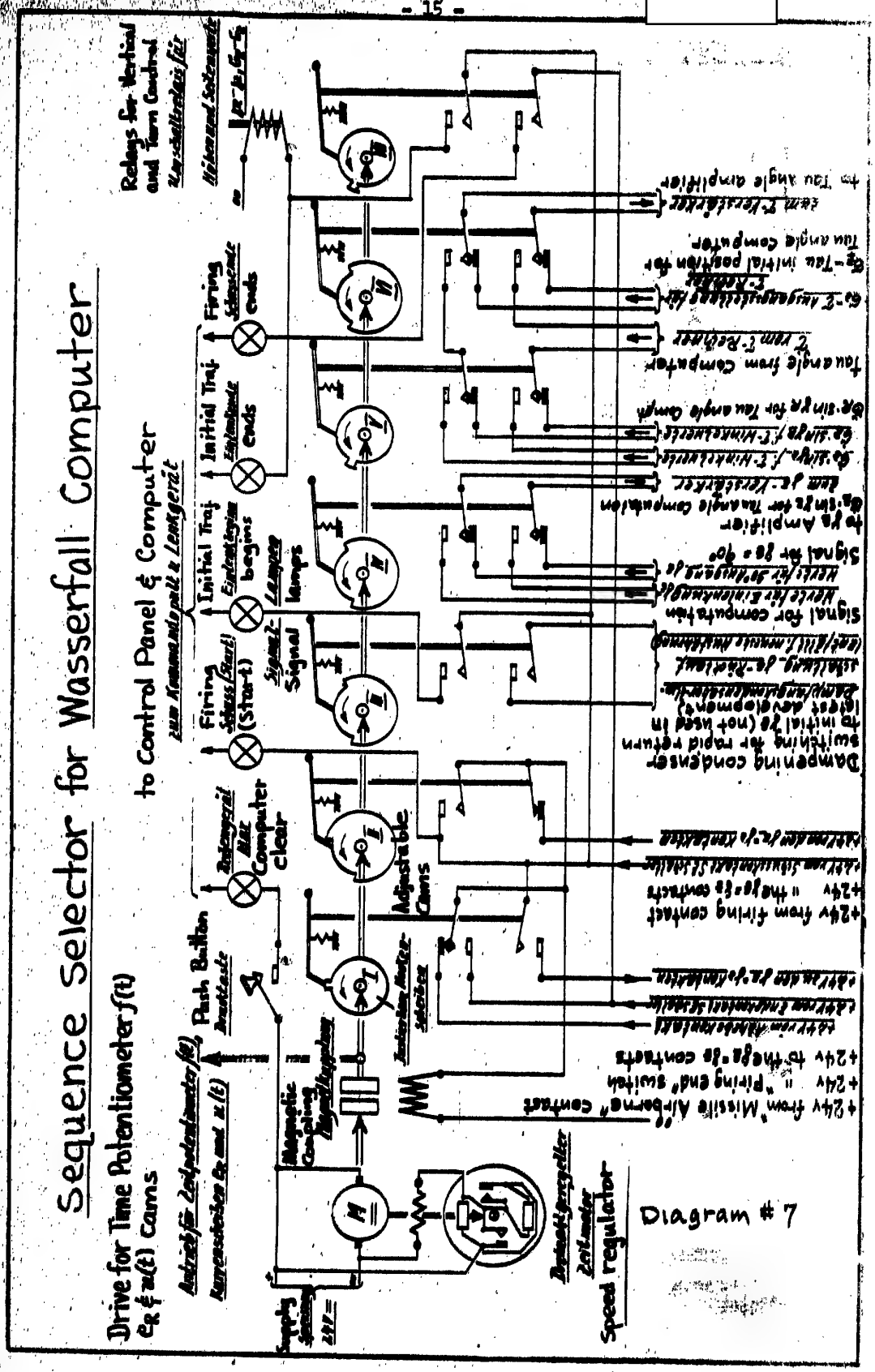

SECRET

Approved For Release 2003/08/28 : CIA-RDP80-00810A001900450002-0

Approved For Release 2003/08/28 : CIA-RDP80-00810A001900450002-0

25X1A

SECRET

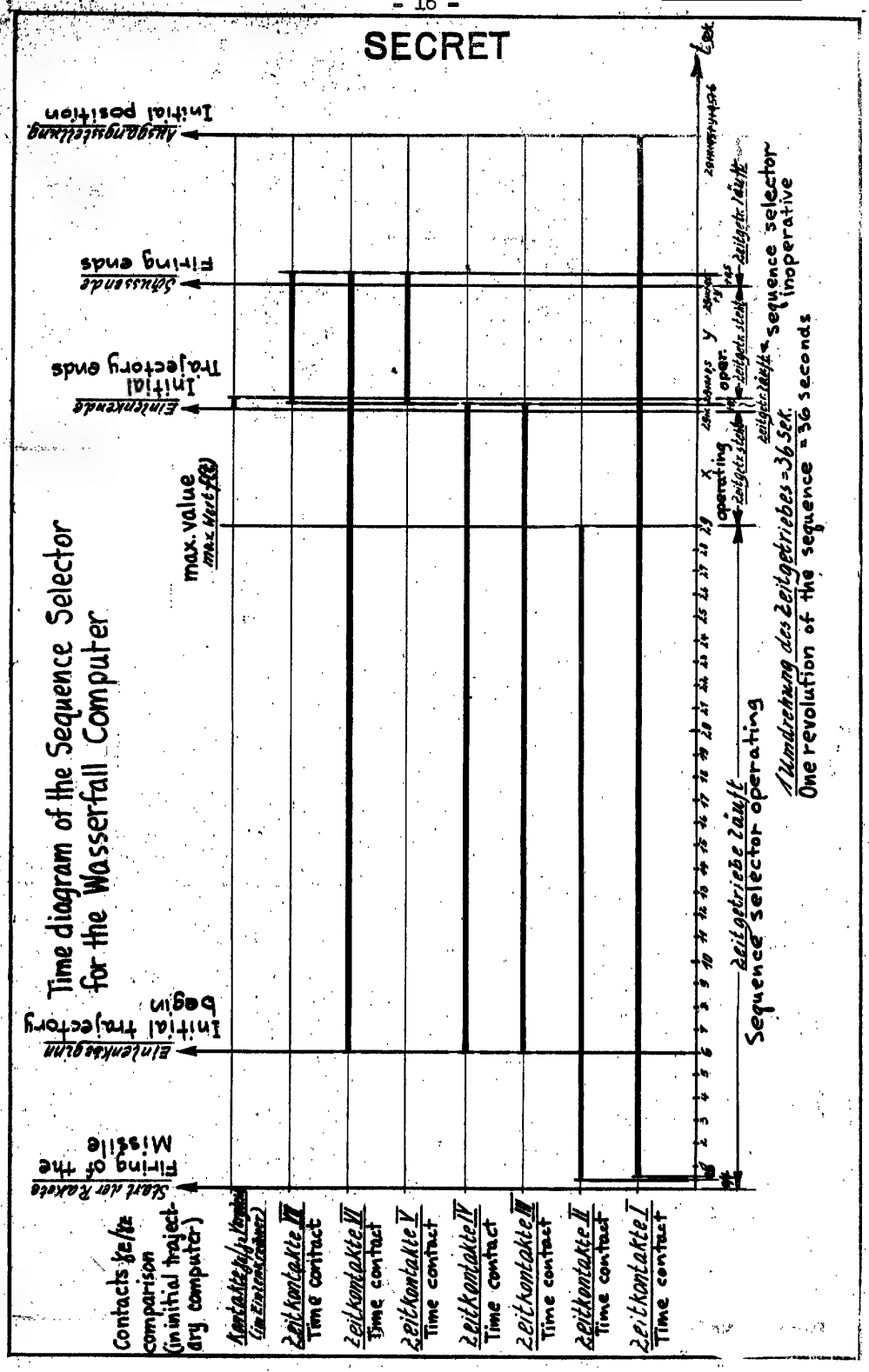

Diagram #8

SECRET

Approved For Release 2003/08/28 : CIA-RDP80-00810A001900450002-0

Approved For Release 2003/08/28 : CIA-RDP80-00810A001900450002-0

Technical Discussion of the Wasserfall Control System

General

1. The Wasserfall system was designed to furnish a ground controlled ground-to-air missile fired from six points around a control point. The following are located at the control point: a radar for location of the target, an optical system for determination of vertical and axiumthal angles of the target and the range, and the control board for the entire system. The system was designed for ranges of 20 kilometers.

Operation

2. The Wasserfall commander has at his disposal an indicator panel which receives angular and range information from a radar set that is placed on the target. When the commander considers that the target is within range, he telephones the optical sight operator to tell him that he should follow the target at the angles indicated to him from the radar system. When the optical sight operator has fixed on the target, the commander decides which firing site should be used by reading the position of the target from the remote indicator panel of the optical sight. /See Diagram 1, page 9./

3. At his command then, the correct parameters are applied to the parallax computer automatically. The correct initial angles are applied to the missile sight. The missile sight turns to the proper initial angles through a servo system that follows the input angles furnished by the computer. When the missile controller (at the missile sight) determines that the sight is in its correct initial position, he closes his firing switch. This sends a signal to the control board, and to the selected firing point which fires the missile. When the missile leaves the platform, a contact is closed to start the time synchronizer in the computer. The computer then operates to control the angular position of the missile sight according to the prescribed dynamic equation. The missile control operator steers the missile by measuring visually the error in position of the missile from the center of the cross hairs in the sight. He operates the joystick (Knueppel) to send a control signal through the Tau-computer to the radio transmitter used for control of the missile. The Tau-computer serves as a coordinate resolver to translate the vertical and horizontal control signals into the appropriate axes of the missile. This is necessary because the missile does not bank in flight, but is controlled vertically and horizontally by apportioning the vertical and horizontal control signals to the missile control surfaces according to the following equation:

$$\dot{T} = \dot{\gamma} \sin \gamma$$

4. The initial trajectory computer operation is based on a second order differential equation that positions the missile sight, so as to close the initial error (taking into account also the parallax) of the missile in a critically damped manner. When the missile is within 0.5 degrees of the target, a contact closes in the computer to cut the computer out of the positioning system of the missile sight. The Tau-computer, however, continues to be operated from the angles furnished by the optical target sight. A proximity fuse was required to detonate the missile when it reached the vicinity of the target. In the absence of a proximity fuse, however, a switch was furnished to the optical target sight operator to detonate the missile at the appropriate time. This is possible since the optical target sight operator has knowledge of the ranges of the target and the missile.

Approved For Release 2003/08/28 : CIA-RDP80-00810A001900450002-0

Approved For Release 2003/08/28 : CIA-RDP80-00810A001900450002-0

5. When the computer is released from the operation, it runs automatically back to its initial position thus readying itself for further firing computation. [A functional diagram of the Wasserfall computer system is shown in Diagram 2, page 10.]

Theory of Operation

6. The Wasserfall system comprises offset fired missiles, an initial trajectory computer, an optical target sight, and an optical missile sight. The Wasserfall missile is fired vertically, and for six seconds is not controlled from the ground. Six seconds after firing, the optical sight is positioned so as to satisfy a second order differential equation which reduces the initial error to a value of 0.5 degrees. The joystick operator corrects the path of the missile so as to center the missile in the missile sight. Since the missile is fired from an offset position, the computer, in calculating the position of the missile, must take into account the parallax involved. From that point on, the joystick operator corrects the path of the missile so as to fly in pursuit of the target. The basic equation which controlled the initial trajectory of the Wasserfall missile is as follows:

$$\ddot{\gamma}_E + f(t) \cdot [g(\gamma_E - \gamma_Z) + \dot{\gamma}_E + \dot{\gamma}_Z] = 0$$

where

γ_E = vertical angle of the missile.

$f(t)$ = a straight line function of time. The purpose of this is to introduce gradually the control input to the missile.

$g(\quad)$ = an arbitrary function of the quantity included between the brackets. This function was derived at Peenemuende during the war, and represented a more optimal function of error with time than obtainable with a linear second order differential equation. In effect, it permitted a more rapid reduction of the error without the high acceleration peak normally obtained immediately after the moment of firing.

γ_Z = vertical angle of the target.

25X1A [redacted] Comment: It should be noted that with the exception of the two non-linear coefficients involved, that the equation is a fairly straightforward second order differential equation with a constant-rate steady state solution. The error reduces to within 0.5 degrees, when γ_Z is zero, in 45 seconds. With a rising γ_Z normally found in a firing problem, the solution time is reduced accordingly. In Diagram 3, page 11, is shown the geometry of the computation with the parallax computed in Cartesian coordinates. Diagram 4, page 12, shows the geometry of the computation with the parallax computed in polar coordinates.]

The Initial Trajectory Computer

7. An accompanying sketch [Diagram 4, page 12] shows a fairly detailed functional layout of the initial trajectory computer together with the Tau-angle computer, and the elements of the time synchronizer necessary to show the interconnection between the components of the computer. The input to the

Approved For Release 2003/08/28 : CIA-RDP80-00810A001900450002-0

Approved For Release 2003/08/28 : CIA-RDP80-00810A001900450002-0
25X1A

Vertical Angle Computer comes from the optical target sight in the form of coarse and fine vertical angles, (γ_Z). These are applied to amplifier A to run motor B which is mechanically connected to tachometer D. The tachometer D furnishes the rate of change of the vertical target angle ($\dot{\gamma}_Z$). This is added to the other elements of the control equation through the potentiometer H, the limiter I, and the mechanical adder D. The acceleration of the vertical angle is obtained through a tachometer L and rate network K to obtain ($\ddot{\gamma}_E$). The controls are applied gradually through the potentiometer AI which is run by the constant speed motor AJ. The computed vertical angle (γ_E) is applied to the sine-cosine resolver P to furnish h_R and ek_R. When ($\gamma_E - \gamma_Z$) decreases to a value below 0.5 degrees, the γ_E amplifier M is fed a reference voltage causing it to return to 90 degrees, thus, preparing the computer for the start of another firing problem. This is done through the contact G which is set to operate at 0.5 degrees. The opening of contact G operates the relay AK in the time synchronizer to switch in the reference voltage for γ_E = 90 degrees. This reference voltage comes from the follow up selsyn O.

8. When the computer goes into operation, the motor AJ runs to furnish a time base for the time synchronizer, and to operate the distance cam AB, and the offset distance reducer cam AD. The output angle of the distance cam turns a selsyn AA to give a voltage proportional to the angle turned by the cam AB. This is applied to the sine-cosine resolver P in the vertical angle computer to furnish the computed height of the missile (h_R).

9. The azimuthal input from the optical target sight is furnished to the computer as coarse and fine signals. These are applied to the σ_Z amplifier X. The amplifier K turns motor T which is mechanically connected to Selsyn S to furnish a voltage proportional to the target angle (σ_Z). This voltage is proportional to the initial angle to which the optical target sight is turned. During the first seconds of flight when the missile is accelerating vertically, this voltage is applied through contact AM, along with the initial Tau angle (T_o) to operate the Tau angle computer, and place it in the correct initial position. The contact AM is operated by the time synchronizer. /The operation of the synchronizer is described in paragraphs 17 through 21. The detailed operation of the time synchronizer is shown in diagrams 7 and 8 on pages 15 and 16./

10. Motor T is also connected mechanically to the sine-cosine resolver R, whose input is ek_R. The outputs of the resolver R furnish $ek_R \sin \sigma_Z$ and $ek_R \cos \sigma_Z$ which are added to components of the offset distance, and applied to the impedance matchers AN and AO. The outputs of the impedance matchers AN and AO are fed to resolver AZ. The rotor of AZ is composed of two coils 90 degrees to each other. The output of one coil is fed to amplifier BA. This operates motor BB to turn the rotor of the resolver AZ, so that it is 90 degrees to the resultant field furnished by the two coils in the stator. This angle is the computed horizontal angle of the missile (σ_R). The second coil in the rotor being 90 degrees to the other receives the maximum voltage of the resultant field. This voltage is the vector sum of the voltages applied to the rotor, and is the horizontal component of the distance of the missile from the firing point ($e'k_R$). This voltage is applied to one side of the stator of the sine-cosine resolver AT. On the other side of the resolver AT, there appears the height of the missile from the firing point plus the differential between the height of the firing point and the aiming point. The voltage from the rotor coil is amplified and operates motor AR, causing the rotor to go to null. The angle of null represents the angle of elevation of the missile from the firing point (γ_R). This angle is transmitted

Approved For Release 2003/08/28 : CIA-RDP80-00810A001900450002-0

Approved For Release 2003/08/28 : CIA-RDP80-00810A001900450002-0 25X1A

by a coarse-fine selsyn system through the relay AH to the control system of the optical missile sight.

11. Similarly, the horizontal angle (σ_B) is taken from the motor BB and sent via a coarse-fine selsyn system (BC and BD) through the relay AH to the control system of the optical missile sight. When the error between the missile and target has been reduced to 0.5 degrees, the contact G operates the relay AH cutting out of operation the computer. The angles which are sent to the optical missile sight then come directly from the optical target sight.

12. The Tau angle computer receives its input from tachometer U. The voltage applied to tachometer U comes from resolver C, and is proportional to the sine σ_Z. This voltage then from the tachometer U is the product of the rate of change of σ_Z and sine σ_Z. This product is added to the follow-up voltage from the output motor of the Tau angle computer (speed feedback), so that the speed of the motor is proportional to the input voltage. The rotation of motor AW operates the four concatenated sine-cosine potentiometers, to give the components of the control signal from the joystick. These components are then applied to the input of the radio transmitter associated with the Wasserfall system. It should be noted that the Tau-angle computer stays in operation until the end of the flight of the missile, whereas the vertical angle computer and the parallax computer go out of operation when the error has been reduced to 0.5 degrees.

13. In this diagram, the parametric values of offset distance, angle and height are indicated as being wound in by hand. The latest model of the computer included automatic selection of these parameters. Operation of the automatic parametric selector is shown on diagram, page 25. The offset distance is applied through resolver AE. The offset angle is applied through AG, and the height differential is applied through AF.

The Polar Computer for Wasserfall

14. The computer of Wasserfall was originally designed to carry out the necessary parallax calculations using polar coordinates. In NII 49, a change-over was made to Cartesian coordinates. For purposes of comparison, the polar computer is described below. (See Diagram 5, page 13.)

15. The vertical angle computer is essentially the same as that used in the computer using Cartesian coordinates. The difference lies in the manner of calculation of the resultant vertical and horizontal angles used to control the missile operator's sight. The horizontal angle from the optical target sight (σ_Z) is in this case converted to a voltage whose phase is a function of the angle. This is done in Selsyn A (shown on page 14 at the bottom left of Diagram 6). A three-phase input voltage to the stator of this selsyn creates a rotating field. When rotated through the angle required, as in the Cartesian computer, the output from the rotor changes phase proportional to the angle through which the rotor is turned. This phase represents the angle σ_Z. This voltage is applied to the potentiometer in the intermediate control system. The potentiometer B is turned through an angle proportional to the horizontal component of the missile distance (ek_R) by motor C. The amplifier for motor C receives its input from the initial trajectory computer where it is computed from the missile distance, and the vertical angle σ_Z. The output of the potentiometer then represents the vector value of ek_R Z. This vector is added to the vector value of the offset distance (u/σ_u) which is obtained in a similar manner in the σ_u intermediate amplifier. The result of this vector addition (which is the output of the preamplifier of D) is the scalar value $e'k_R$.

Approved For Release 2003/08/28 : CIA-RDP80-00810A001900450002-0

Approved For Release 2003/08/28 : CIA-RDP80-00810A001900450002-0 25X1A

This voltage is applied along with a voltage proportional to the missile height in resolver E to furnish the output vertical angle γ_E. The amplifier D is used to furnish an angle proportional to the sum of the input angles. This angle is applied through a coarse-fine selsyn system to the missile sight.

16. The other elements of the computer system are essentially the same as that using Cartesian coordinates.

Description of Sequence Selector (Time Synchronizer) for the Wasserfall Computer

17. In order to obtain a clear picture of the operation of the time syncronization that triggers off the various functions of the Wasserfall computer, a detailed diagram is shown on page 15. The condition of the relays associated with the seven cams with respect to time is also shown on page 16.

18. The initial angular position of the cams is as shown on page 15. Upon receipt of the signal showing that the missile is airborne, the magnetic coupling of the constant speed motor is clutched in by energizing it through the upper contacts of cam No. 1. The cams, being connected mechanically to the motor, begin to turn. Cam No. 2 operates 0.4 seconds after the start to allow voltage to be applied to the magnetic coupling through the upper contacts. One half (0.5) second after the starting time, cam No. 1 releases. This does not affect the operation at this point. Six seconds after the starting time, Cam No. 3 operates to switch on the signal light showing the firing commander that the initial control has begun. At the same time, cam No. 4 and cam No. 6 operate to connect the γ_E amplifier with its input, and to connect the Tau angle amplifier with its input.

19. The cams turn then for 29 seconds. During this time, the shaft of the motor is connected through the magnetic coupling to the cams controlling the gradual reduction of the base offset distance in the computer, and to operate the u(t) potentiometer that is integral with the initial trajectory computer. At the end of 29 seconds, cam No. 2 operates to break the circuit to the magnetic coupling of the motor. The initial trajectory computer continues to operate the optical tracking sight. When γ_E is within 0.5 degrees of γ_Z, a voltage is applied through the lower contacts of cam No. 2 (which is now closed). to energize the magnetic coupling again. Three-tenths seconds later, cams No. 3 and 4 operate, the signal light goes out, and a voltage representing the initial position of γ_E (90 degrees) is applied to the γ_E amplifier. Two tenths seconds later, the $\gamma_E = Z$ contacts in the initial trajectory computer open up again, and the voltage is removed from the magnetic coupling. Cam No. 5 operates to replace the computed γ_R with γ_Z. This releases the entire computer with the exception of the Tau-angle computer.

20. When the optical tracking operator determines that the end of the firing has been reached (either with a hit or miss), he operates his firing end switch. This closes a circuit which applied a voltage through the closed upper contacts of cam No. 1 to cause the motor to be recoupled to the cams. Cam No. 6 operates to furnish the Tau angle amplifier with another initial angle that has been selected by the firing commander. The cams continue to run until cam No. 1 operates, breaking the circuit to the magnetic coupling. Thus the cams have turned through 360 degrees and the sequence selector is again ready to receive an impulse from the "missile airborne" contact in the firing platform.

21. It should be noted that the motor is DC, shunt-wound, and that the regulator is a standard inertial governor.

Approved For Release 2003/08/28 : CIA-RDP80-00810A001900450002-0

Approved For Release 2003/08/28 : CIA-RDP80-00810A001900450002-0

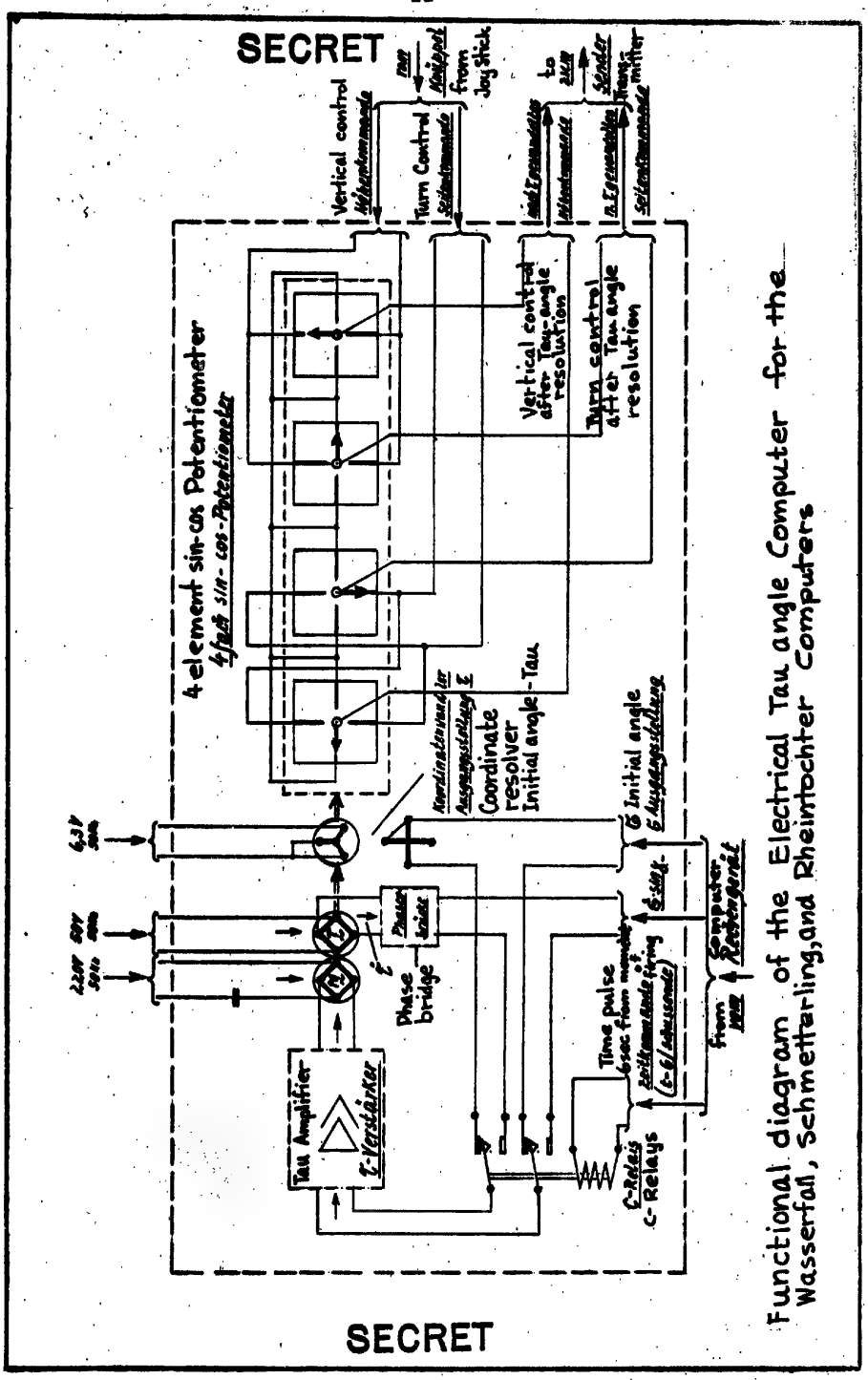

Functional diagram of the Electrical Tau angle Computer for the Wasserfall, Schmetterling, and Rheintochter Computers

Diagram #1

SECRET

Approved For Release 2003/08/28 : CIA-RDP80-00810A001900450002-0

SECRET 25X1A
Approved For Release 2003/08/28 : CIA-RDP80-00810A001900450002-0

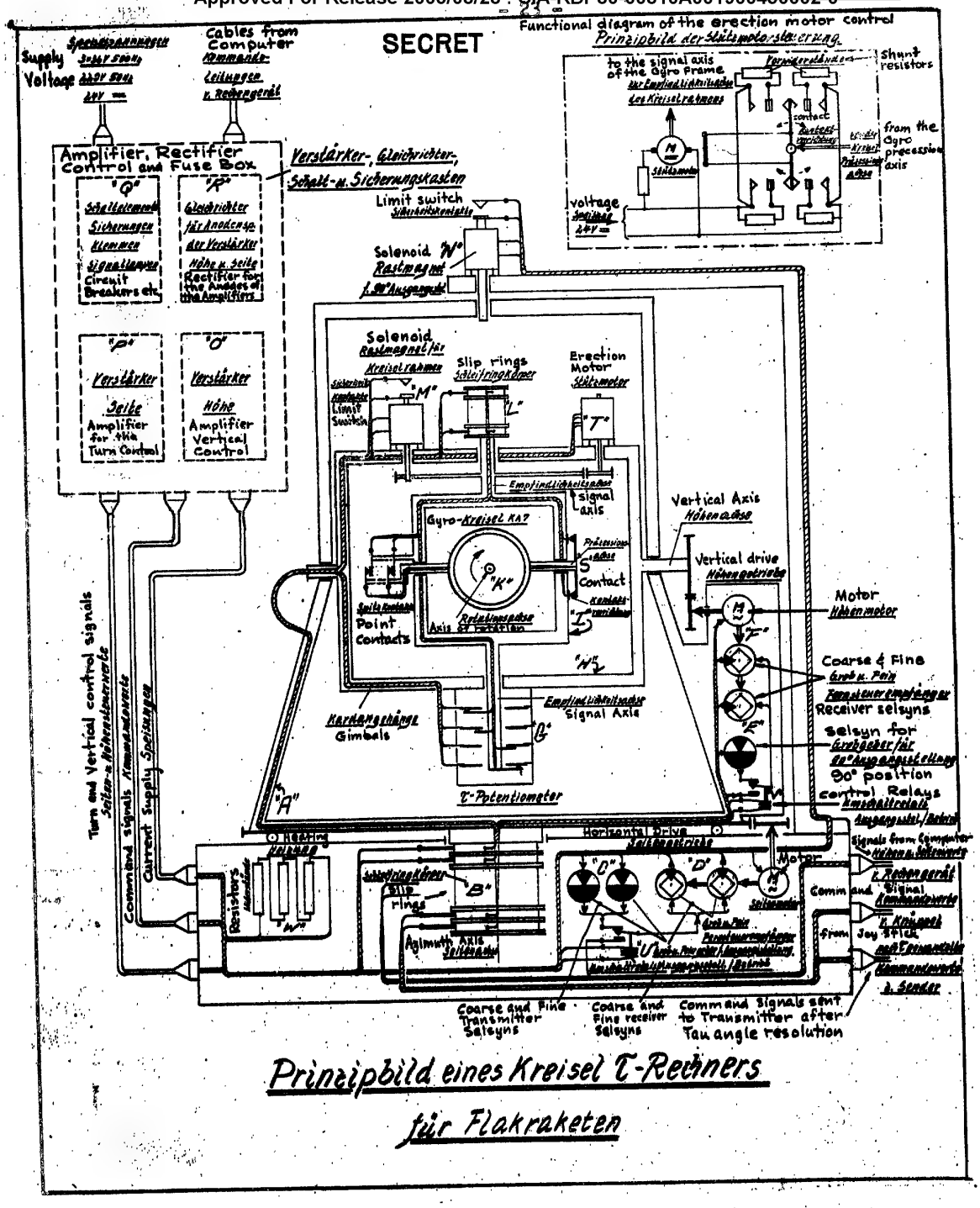

Prinzipbild eines Kreisel τ-Rechners für Flakraketen

Functional Diagram of the Gyroscopic Tau angle Computer for Wasserfall

- Diagram # 2

SECRET

Approved For Release 2003/08/28 : CIA-RDP80-00810A001900450002-0

Approved For Release 2003/08/28 : CIA-RDP80-00810A001900450002-0

The Tau-Angle Computer

The Electrical Tau-Angle Computer

1. The description of the operation of the electrical Tau-angle computer has been previously mentioned. The detailed operation of this computer is as indicated below and refers to an accompanying sketch [Diagram 1, page 22].

2. Prior to the operation of the computer, the sine-cosine potentiometers are positioned by the angular position transmitted from the Wasserfall computer. The C-relay [in the lower portion of the diagram on page 22] is closed to furnish an error voltage representing the difference in the angular positions of the transmitted angle (sigma), and the position of the sine-cosine potentiometers. This voltage is applied to the servo amplifier which actuates the motor to furnish the power to turn the potentiometers.

3. When the initial sigma angle has been reached, the C-relay operates, removing the input from the sigma output of the Wasserfall computer. A voltage proportional to $\delta \sin \gamma$ (computed in the Wasserfall computer) is applied to the amplifier against the feedback voltage of a tachometer connected mechanically to the servo motor. The motor speed becomes a function of $\delta \sin \gamma$, so that the underlying equation $t = \delta \sin \gamma$ is fulfilled.

4. The outputs of the sine potentiometers are combined and applied to the elevation section of the transmission, and the cosine potentiometer outputs are combined and applied to the turn control portion of the transmission.

5. The accuracy of this Tau-angle computer was approximately 1.0 degree.

The Gyroscopic Tau-angle Computer

6. In the course of the development of the Wasserfall computer system at NII 49, a new method was suggested by the Soviets to furnish the necessary Tau-angle computation. The method, although more elegant technically, required much more space (five times), and required three times more electronic equipment such as rectifiers, amplifiers, etc. Since it was a Soviet idea, the Germans, although having voiced their objections, built the gyroscopic Tau-angle computer. This computer evidently worked to the same accuracy as the electrical Tau-angle computer designed by the Germans.

25X1A [redacted] Comments: Although the disadvantages stated above are sufficient to establish the electrical method as superior to the gyroscopic method of computing the Tau-angle, it demonstrates the fact that some understanding and initiative in the Soviet elements of NII 49 existed regarding use of gyroscopes for computation purposes. With some redesign and simplification, the gyroscopic method might well be the basis of as good a piece of computing equipment as the electrical computer. It is not intended to imply that the idea itself for the gyroscopic computer is brilliant. Actually, any design engineer experienced in the use of gyroscopes for stabilization purposes should be able to come up with this solution.]

7. It was necessary, as in the electrical computer, to furnish an angle Tau related to gamma and sigma according to the following equation:

$$\dot{T} = \sin \gamma$$

Approved For Release 2003/08/28 : CIA-RDP80-00810A001900450002-0

Approved For Release 2003/08/28 : CIA-RDP80-00810A001900450002-0

25X1A

The angle sigma (representing the direction of the missile) is furnished to the computer by turning the turntable upon which is mounted a two-gimbal gyroscope. The gyroscope housed in the inner gimbal is precessed so that it assumes the angle gamma (representing the vertical angle to the missile). As the housing is turned in response to the change in sigma, and as the inner gimbal is turned to follow the gamma input, the slip rings on the inner gimbal are connected to sine cosine potentiometers which furnish the necessary resolution of the input command turn and elevation signals according to the above mentioned equation.

8. The gyroscopic Tau-angle computer operates in the sequence outlined below. (Refer to accompanying sketch /Diagram 2, page 23/.)

9. The housing A is oriented to the angular position of the missiles by the motor connected to receiver selsyns D. All the missiles are oriented in the same angular position. The blocked selsyns C act as transmitters, and upon initiating the operation of the Tau-angle computer, a relay is operated to cause the motor to turn A according to the angular position of the transmitters C. During this time, the gimbals are locked in the 90 degree position. When the error between C and D is reduced to zero, the gimbals are unlocked by solenoids M and N.

10. The initial angle of σ_r is applied to the computer by the action of the relay U which connects the receiver selsyn D with the σ_z transmitter selsyns in the Wasserfall computer. The turntable then assumes the initial angle σ_{Zo}. Since the inner gimbal ring I is unblocked and the rotor is going at full speed, the gyroscope K remains in its initial position.

11. The outer gimbal is then rotated to 90 degrees to erect it, and then to the initial γ_{Ro} by the operation of the selsyn system E and F. The operation of this servo system is such that it can precess at 30 degrees per second. The outer ring H then follows the input gamma from the Wasserfall computer. The gyroscope of course remains in the vertical position, but the housing H rides at the angle gamma to the turntable A. The computer is now ready for operation.

12. By operation of relays U and V, continuous values of sigma and gamma are transmitted to the servo systems controlling the position of A and H. By the geometry of the gimbals and the gyroscope, it can be seen that as the turntable A is turned through sigma, the output angle appearing at G is sigma · sine gamma. Connected to the spindle G are the four sine-cosine potentiometers that form the resolve system for the translation of the input signals from the joystick operator. The resolved signals are then applied to the transmitter from the output of the resolvers.

13. The gyroscope is kept erect throughout the entire operation by contacts S which operate a motor T. /A detailed view of the contacts is shown in the upper right hand corner of the diagram. In the upper left hand corner of the diagram are shown the electronic components required for the operation of the computer./ Components O and P are the amplifiers for servo systems C-D and E-F respectively. R is the rectifier which furnished DC for the anodes of the amplifiers. Q is the box containing circuit-breakers, junction boxes, etc.

14. W is the heating element in the computer that was used in order to keep the gyroscope and gimbal bearings operative even at temperatures down to minus 60 degrees. This element was not automatic in operation, but was switched on at the discretion of the operating personnel. (When the temperature reached minus 20 degrees, the heating element was switched on.)

Approved For Release 2003/08/28 : CIA-RDP80-00810A001900450002-0

Approved For Release 2003/08/28 : CIA-RDP80-00810A001900450002-0

25X1A

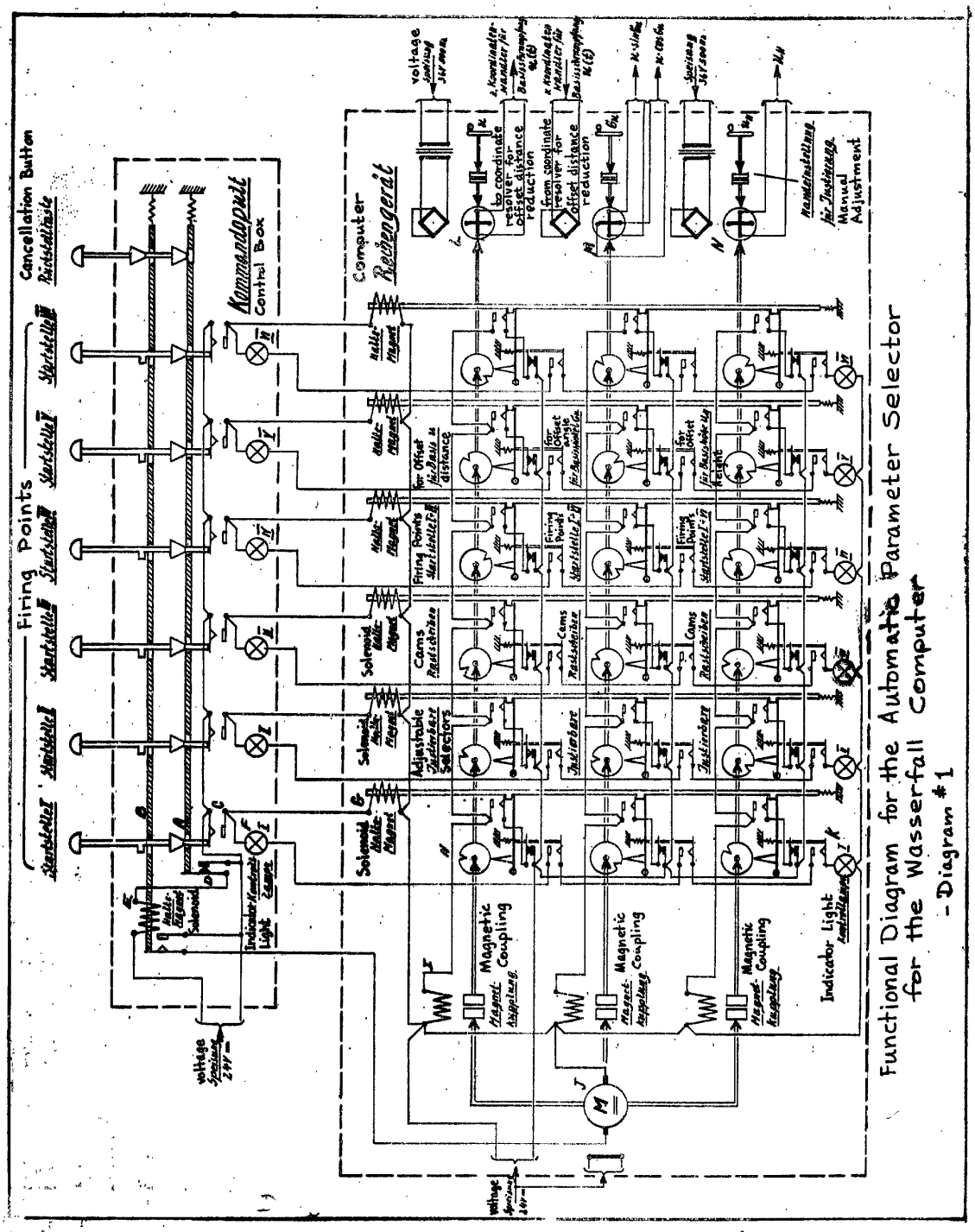

Functional Diagram for the Automatic Parameter Selector for the Wasserfall Computer

- Diagram #1

Approved For Release 2003/08/28 : CIA-RDP80-00810A001900450002-0

Approved For Release 2003/08/28 : CIA-RDP80-00810A001900450002-0

Automatic Selection of Offset Parameters for the Wasserfall Computer

1. In the sketch on page 26 is shown a functional layout of these elements of the Wasserfall computer system that comprised the automatic selection equipment for the offset angle, distance, and height of each of the six firing sites. The upper portion of this sketch shows the Wasserfall commander's control box. In this box are located the six buttons that correspond with the six firing sites. It includes a cancellation button (Rueckstelltaste) which is operated prior to the selection of another firing site.

2. The lower portion of the sketch shows the electromechanical elements of the electric system which are located in the computer itself. Both the control box (available to the Wasserfall commander) and the computer contain indicator lights which operate automatically when a particular set of parameters have been selected. Upon operation of a particular button, the following sequence takes place:

   a. Control Rod (A) is moved to the left by the cone on the push button rod.

   b. Keeper Rod (B) is released by the solenoid (E) and holds the push botton down. The solenoid is released by breaking contact (D).

   c. Contact (C) is made by the action of the push button rod. This allows current to flow in the solenoid (G). This lifts the rod forming the core of the solenoid. This rod closes the contacts which furnish current to the magnetic coupling for the three parameter cams corresponding to the site selected. The rod also frees the three cam followers which now press against the cam for this firing position.

   d. The motor turns the three cams through the magnetic couplings associated with each cam. When the cam rotates so that the cam follower presses into the detent, the circuit is broken to the solenoid controlling the magnetic coupling, and a contact is made which is in series with other contacts leading to the indicator lights in the computer and in the Wasserfall commanders control box.

   e. The three parameters are then selected as described above by the action of the detents and the cam followers which disconnect the coupling to the motor when the proper position has been reached. Although the other cams representing the other five positions are mechanically connected with the coupling to the motor, there is no action which results because their cam followers are held away from their respective cams by the solenoid rods which remain in neutral position.

   f. The mechanical angles selected are transmitted to:

      (1) The variable transformer (L) which gives a voltage proportional to the offset distance (u) selected.

      (2) The sine-cosine resolver (M) which is fed a voltage proportional to the offset distance (u) and is turned through the angle sigma u, gives two voltages proportional to u sin sigma u and u cosine sigma u.

Approved For Release 2003/08/28 : CIA-RDP80-00810A001900450002-0

Approved For Release 2003/08/28 : CIA-RDP80-00810A001900450002-0

(3) The variable transformer (N) which gives a voltage proportional to the height (u_h) of the missile firing site selected.

3. Adjustment of the 18 parameters are done in the following manner:

a. Set screws are loosened on the selector cams.

b. The shaft is turned through an angle corresponding to a particular offset distance (u). This is done by the hand wheel [shown on the right side of the diagram].

c. The cam is turned so that the follower is in the detent position.

d. The set screw of the particular cam is tightened. The adjustment then of the cam corresponds with the offset distance (u) desired. Any time this particular cam and follower is put into operation, this value of offset distance (u) will be selected. The same procedure is carried out with all the cams. When complete, the selector system is set up to select the three offset parameters associated for any of the six firing sites.

Approved For Release 2003/08/28 : CIA-RDP80-00810A001900450002-0

Approved For Release 2003/08/28 : CIA-RDP80-00810A001900450002-0

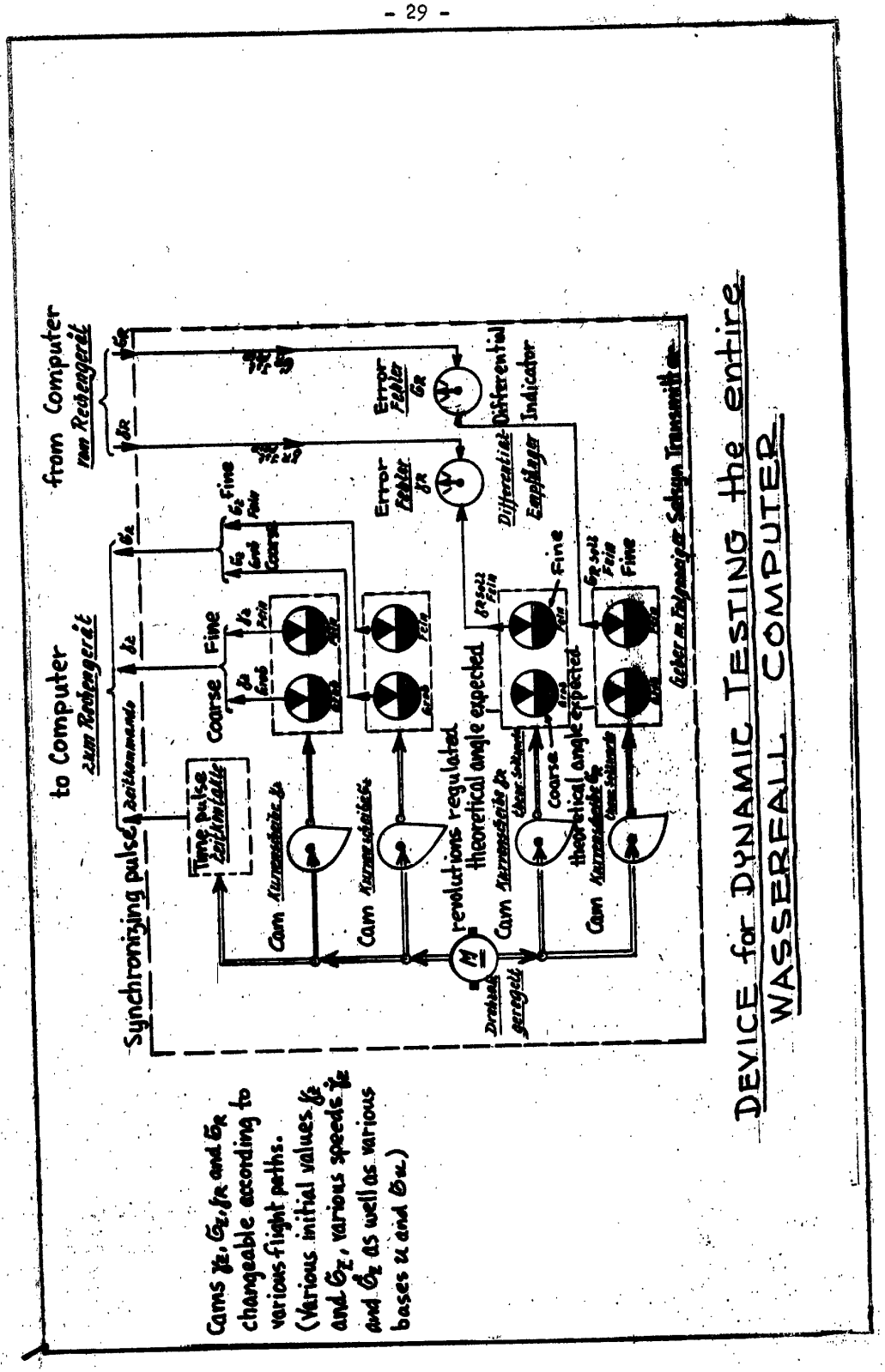

Approved For Release 2003/08/28 : CIA-RDP80-00810A001900450002-0

Approved For Release 2003/08/28 : CIA-RDP80-00810A001900450002-0

SECRET

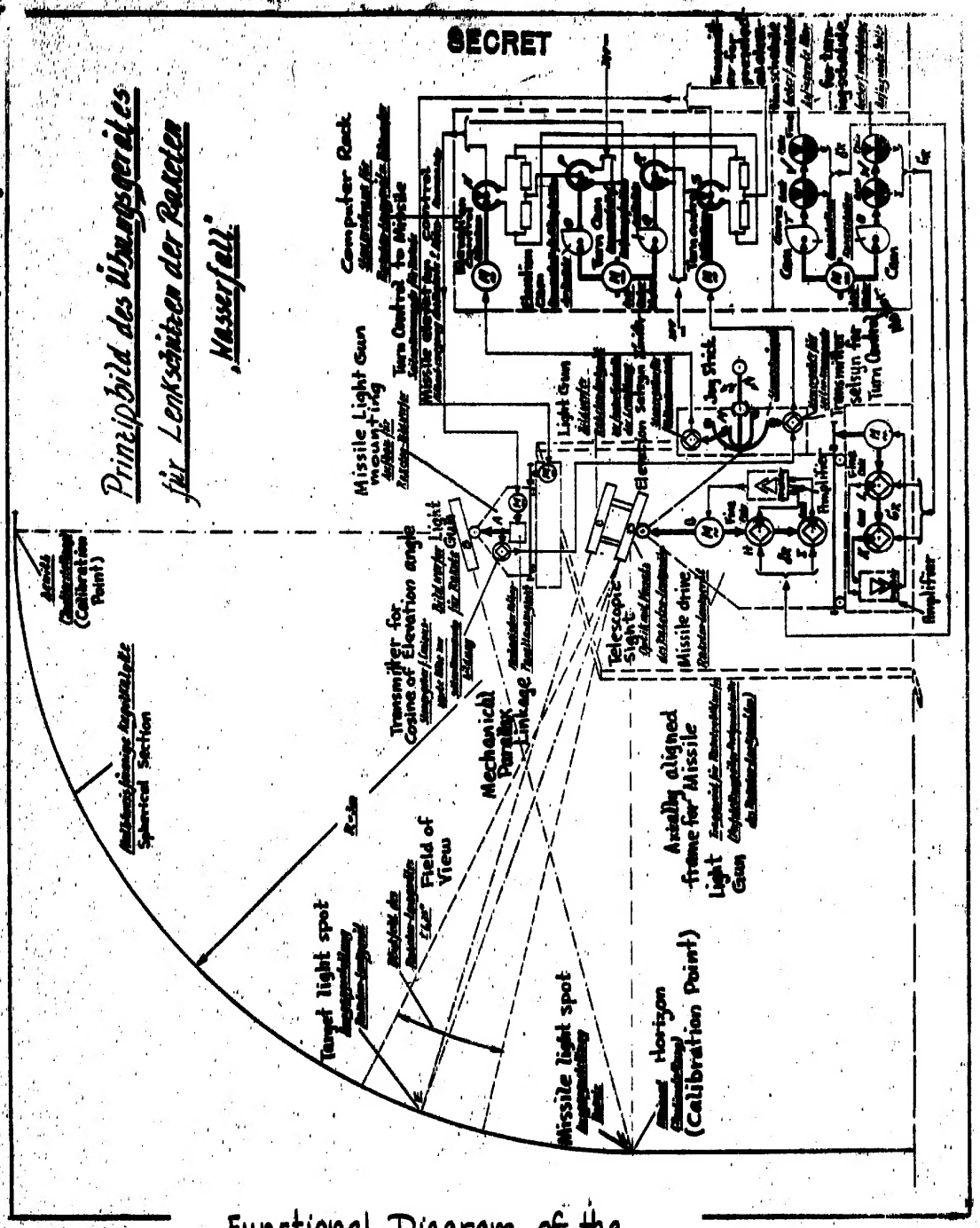

Functional Diagram of the Wasserfall Trainer

SECRET

Approved For Release 2003/08/28 : CIA-RDP80-00810A001900450002-0

Approved For Release 2003/08/28 : CIA-RDP80-00810A001900450002-0

The Wasserfall Trainer

1. In view of the difficulty of controlling the Wasserfall missile, the Germans at NII 49 designed and built a trainer to give controllers experience. [redacted] Comments: The type of control utilized in the Wasserfall system is characterized by impulses of cross-course acceleration which are furnished by the optical target sight operator. With the assumption that the internal control time lags are negligible, it can be easily seen that the problem is a second order one of trying to produce a flight trajectory along a straight line. The error information consists only of the displacement. The error correcting mechanism consists of applying discrete amounts of cross-course acceleration. There being no feedback to the controller other than the displacement error that is obtained visually, stability is only obtained through mental computation of cross-course rate of change and the ratio between the displacement of the joystick and the actual amount of acceleration produced in the missile by the consequent control fin movement. This mental computation is difficult, and can be compared with the problem that a pilot has when faced with the use of a cross-pointer indicator I-101-C, in making an instrument approach on the USAF Instrument Low Approach System. In view of the extensive effort in the USAF to provide equipment to help the pilot make the mental computation necessary (for example, automatic approach coupling, zero-reader, and other instruments) it can be considered that NII 49 was deficient in producing such computer equipment to help the joystick operator.

25X1A

It is concluded that the joystick operator was faced with a comparatively difficult control problem, with only the simulator type of training available through the Wasserfall trainer.

2. The trainer consists of several components. (See accompanying sketch, page 30.)

a. The Target Simulator. This was a device that turned and raised in elevation a light spot on a portion of a sphere, according to a predetermined formula. This formula represented a typical flight trajectory of aircraft targets. Superimposed on this moving spot was a cross-hair shadow. This shadow was oriented so that the cross hairs were vertical and horizontal. The center of the cross hairs represented the position of the target, which in actual firing is furnished by the optical target sight operator. In line with the light gun, is a telescope through which the joystick operator sights.

b. The Missile Simulator. The missile simulator was a device that turned and raised in elevation a second light spot on the spherical surface. The movement of this light spot was regulated by a computer which furnished values to the turn and elevation control so as to represent a vertical firing of the Wasserfall missile. The movement of the spot was modified by movements of the joystick operated by the controller under training, so as to simulate the changes in flight path that would obtain if an actual missile were being controlled. The joystick was operated so as to bring the second spot of light into superposition with the spot representing the aircraft target. In order to distinguish between the two spots, the missile spot had cross-hair shadows on it which were oriented at 45 degrees from vertical.

Approved For Release 2003/08/28 : CIA-RDP80-00810A001900450002-0

Approved For Release 2003/08/28 : CIA-RDP80-00810A001900450002-0
25X1A

c. The Sphere. The spots of light representing the target and the Wasserfall missile were projected on a 90 degree section of a sphere. This sphere was three meters in diameter. For purposes of calibration, the sphere was marked off in angles.

d. The Computer. The functions of the computer were as follows:

(1) To furnish a typical path to the Target Simulator.

(2) To calculate the changes in path made when the joystick is operated.

(3) To take into consideration the distance of the target and missile in computing the resultant angular change of the target and missile spots of light.

3. When the simulated firing is initiated, the target spot moves in direction and vertical angle according to a preselected flight plan. The initial vertical (on the sphere) is 20 degrees. The missile spot is started at zero degrees vertical angle, and at the same azimuth. Six seconds after the simulated firing, the missile spot crosses the target spot, and the joystick operator begins his control. He moves the joystick so as to keep the spots of light in superposition. His ability to do this can be judged easily by visual observation on the part of the instructor. When the problem has ended, he returns the missile spot to its original position by manually operating the computer through the joystick. Many hours of training were necessary before a joystick operator could be considered as a trained controller. In my opinion at least one thousand runs were necessary in order to achieve satisfactory results.

4. The trainee operates the joystick to keep the spot of light from light gun B on that transmitted by light gun D. The joystick furnishes control signals in vertical and horizontal components to the elevation control computer and the turn control computer. These signals are generated in selsyn transmitters connected mechanically to the joystick. The motors to which the transmitter selsyns are connected then run a speed proportional to the displacement of the joystick. The motors turn the arms of potentiometers N and S so as to bias the changing signal as determined by cams O and Q. The motors in the missile light gun mounting A, turn at a speed proportional to the voltages generated in the missile control computer (from potentiometers N, P, R and S). Thus, the actual acceleration of the missile light gun is proportional to the displacement of the joystick. This is roughly comparable to the actual operation of the missile itself. The light gun D, which represents the target, is driven by a selsyn system K, L, and M. The components of the target path are determined by cams T and U. These cams can be changed to represent different types of target paths.

Approved For Release 2003/08/28 : CIA-RDP80-00810A001900450002-0

Approved For Release 2003/08/28 : CIA-RDP80-00810A001900450002-0

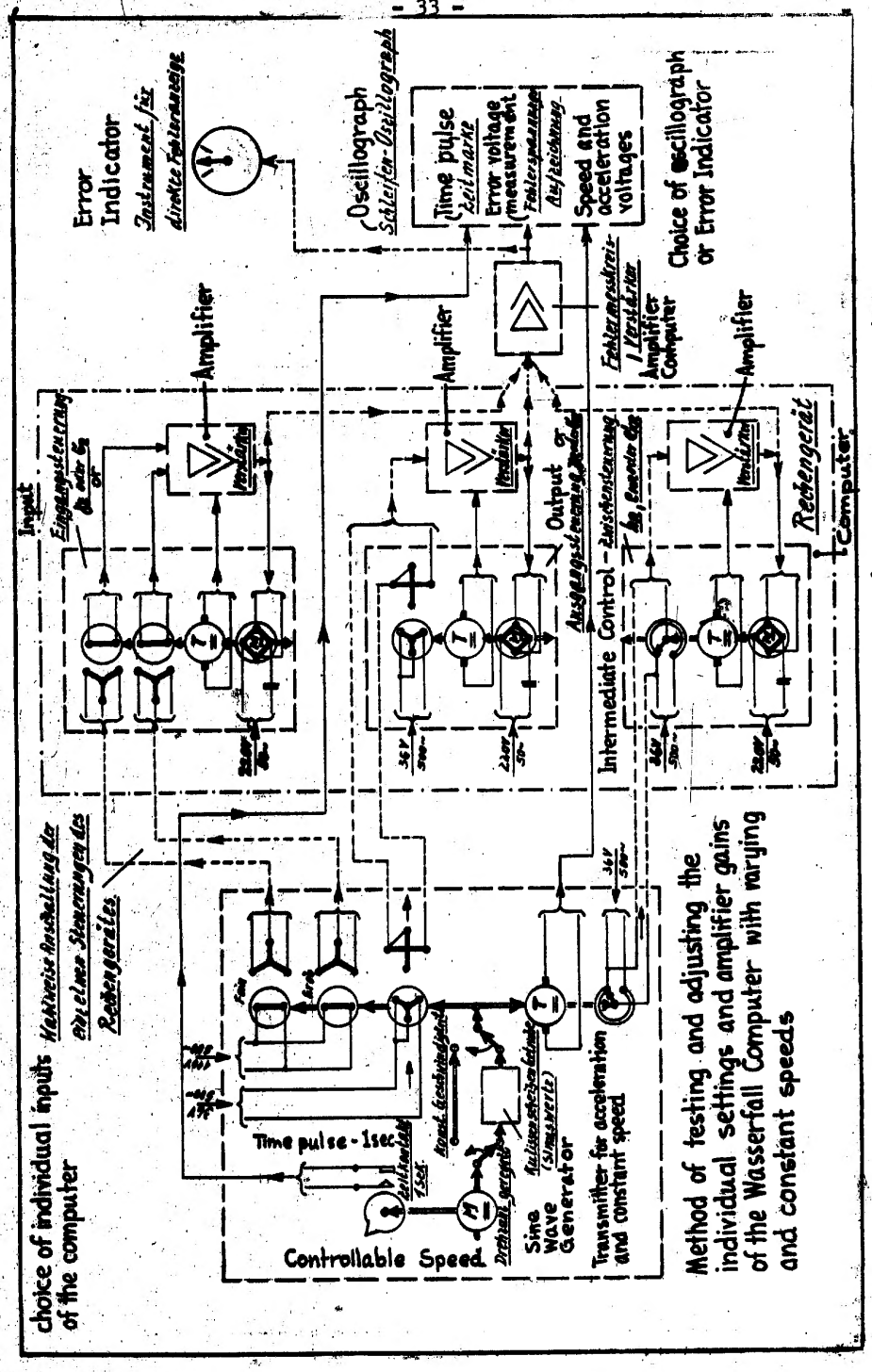

Approved For Release 2003/08/28 : CIA-RDP80-00810A001900450002-0